Flying Squirrel Nestbox

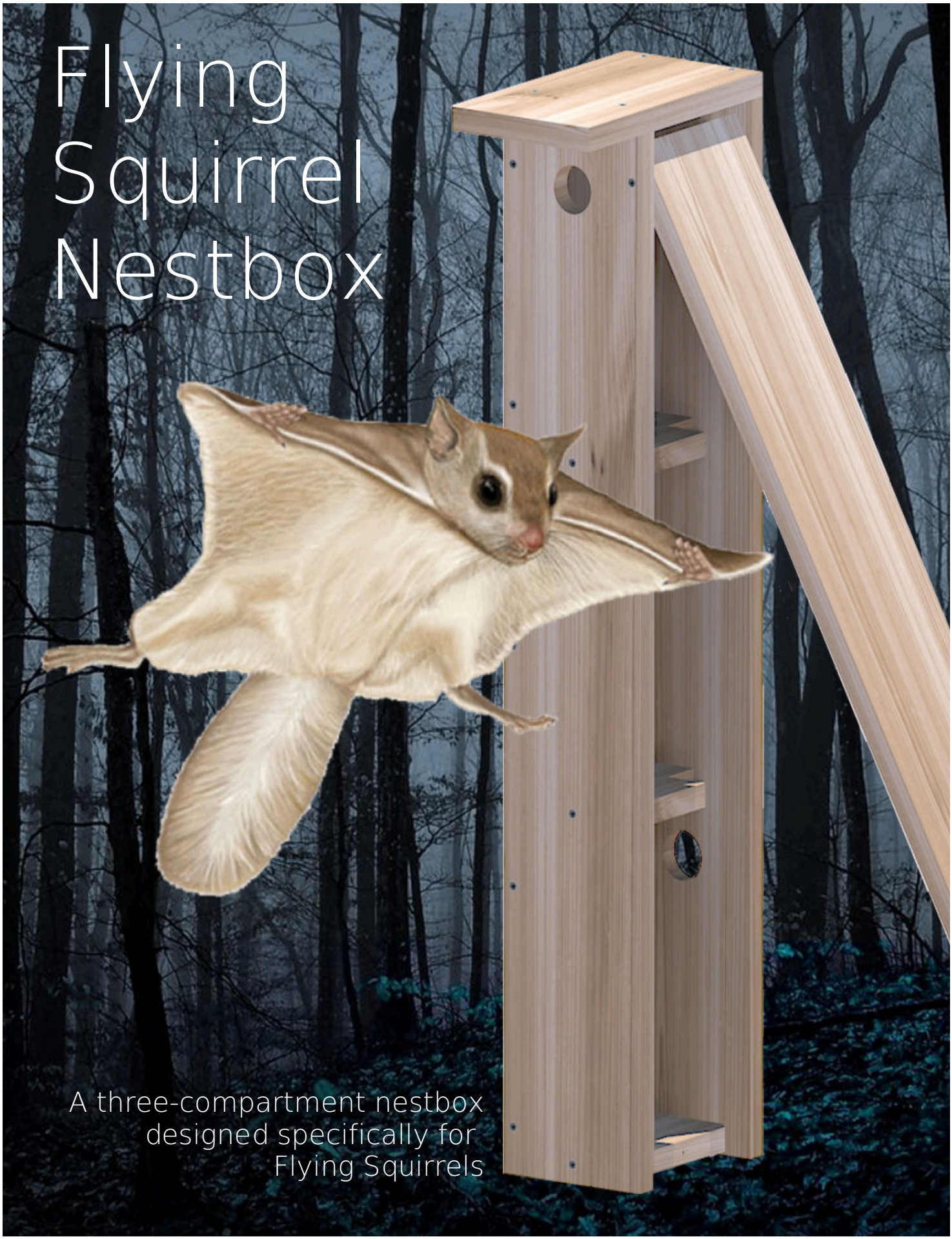

A three-compartment nestbox designed specifically for Flying Squirrels

plan by NestBoxBuilder.com Copyright © 2010 All rights reserved

photo by Keith Kridler

The Flying Squirrel

Flying squirrels live in coniferous and mixed forests (especially those that produce mast (nuts) like maple, beech, hickory, oak and poplar). Because they are nocturnal, they are the most common mammal seldom seen by humans. They do not hibernate during the winter.

Two species are found in North America: Northern and Southern. The Northern typically has one brood per season; the Southern normally has two. When the young are born, they rely on their mothers to care for them for about two months.

Flying squirrels don't really fly, they glide. They steer by adjusting the tautness of the patagium (furry membrane), and use their tail as a stabilizer and to brake before landing. They can glide 80-150 feet.

-condensed from sialis.org

Northern Flying Squirrel

Southern Flying Squirrel

photo by Keith Kridler

The Design

This nestbox was designed about 75 years ago by a gentleman from Texas. He would put up three or four of these boxes, scattered over about ten acres of woods, the area he considered the "home range" of a colony of flying squirrels.

He would then drive about a mile or two and put out another set of boxes. He claimed to have had upwards of forty colonies of flying squirrels back then.

The nestbox has three compartments, each 10" tall. The female, or adult pair, will stay in one compartment, while juvenile squirrels will be in another compartment. The newborn pups will be in the third. The mid floors that separate the compartments both have 1 1/2" x 1 1/2" cutouts on one corner. These allow the squirrels to move between compartments, and provide an escape route in the event a climbing snake enters the box.

Nestbox Location

Mount the box 8 - 25 feet high in open woods with good tree canopy overhead.

- Keith Kridler

Nest ID

Unlike a typical bird nest, there is no "nest cup" on top. Construction depends on available materials.

Northern: grass, shredded bark (e.g., cedar, grape, birch, cypress), moss, lichen, feathers, found animal fur, feathers, small twigs, leaves and conifer needles, and man-made materials like attic insulation or newspaper. In summer, may use a leaf nest for "roosting." Solitary male nest is much less bulky than a natal nest.

Southern: grass, shredded bark (Pine, Eastern Red Cedar, Bald Cypress) or, in the Deep South, Spanish moss and palmetto fibers.

Monitoring

To determine if the box is being used, tap or scratch the nestbox (or the tree it's mounted on) while watching the entry holes. If the box is occupied, the flying squirrel will usually take a peek. Once you've confirmed their presence, *leave the box alone.* Opening the door to "take a quick look" may result in them moving to a new location.

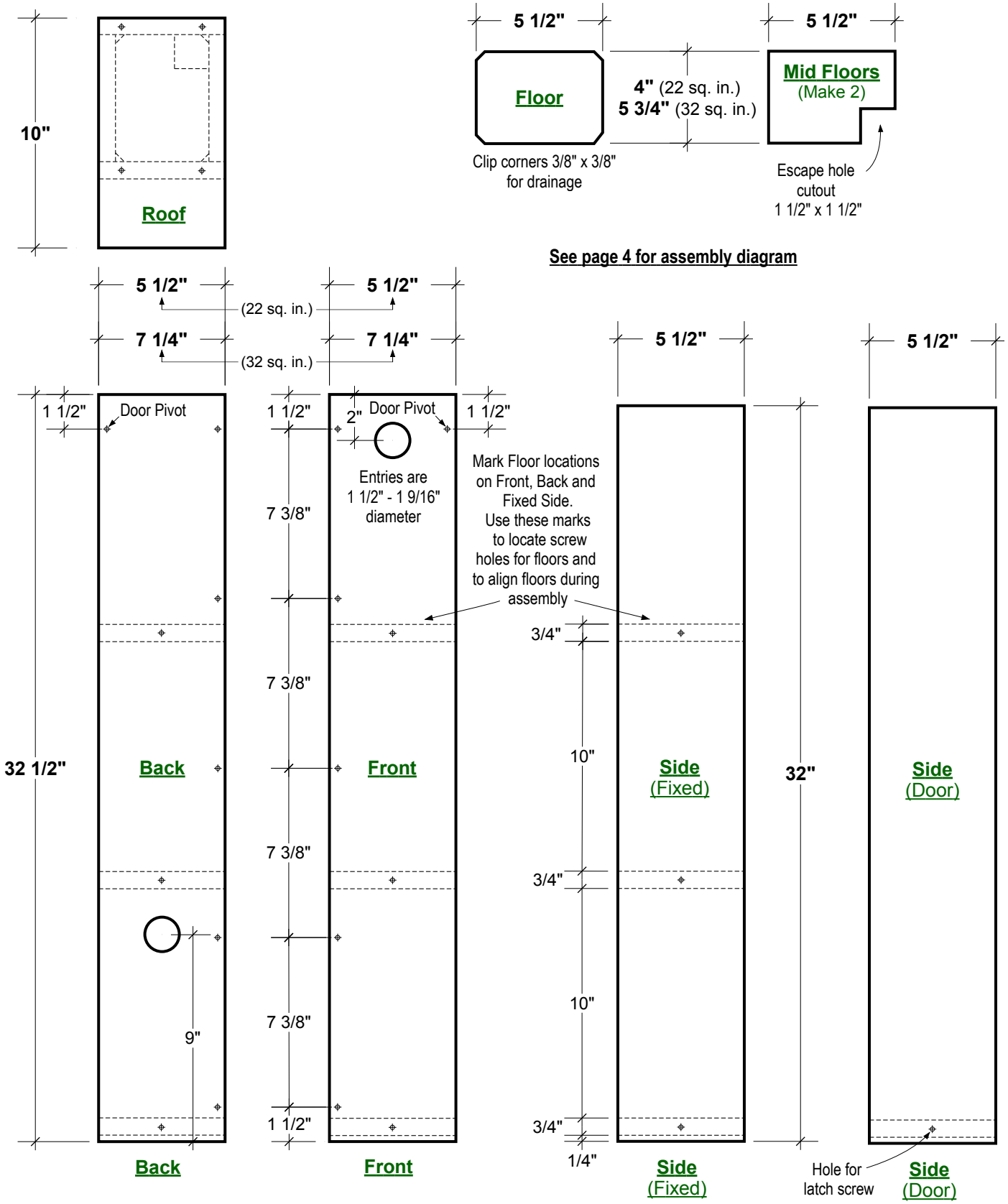

22 Square Inch Floors		32 Square Inch Floors	
Quan	Material	Quan	Material
14 ft.	1 x 6 (3/4" x 5 1/2")	7 ft.	1 x 6 (3/4" x 5 1/2")
26	#8 x 1 5/8" deck screws	7 ft.	1 x 8 (3/4" x 7 1/4")
		26	#8 x 1 5/8" deck screws

Flying Squirrel Nestbox

Drawn by: Fred Stille, Sr. | February 15, 2015 | Page 3 of 4

plan by NestBoxBuilder.com Copyright © 2010 All rights reserved

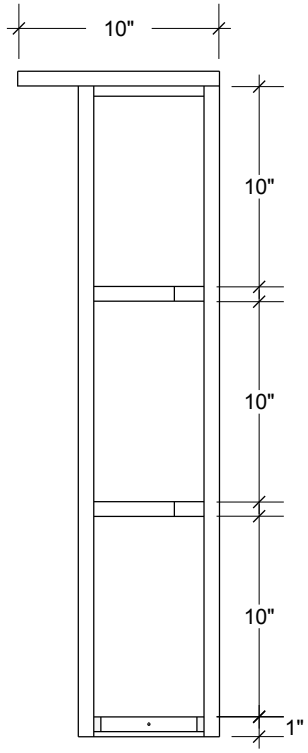

Right Side View
(Door removed)

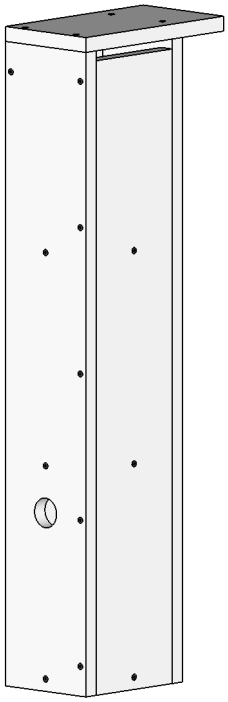

Rear View

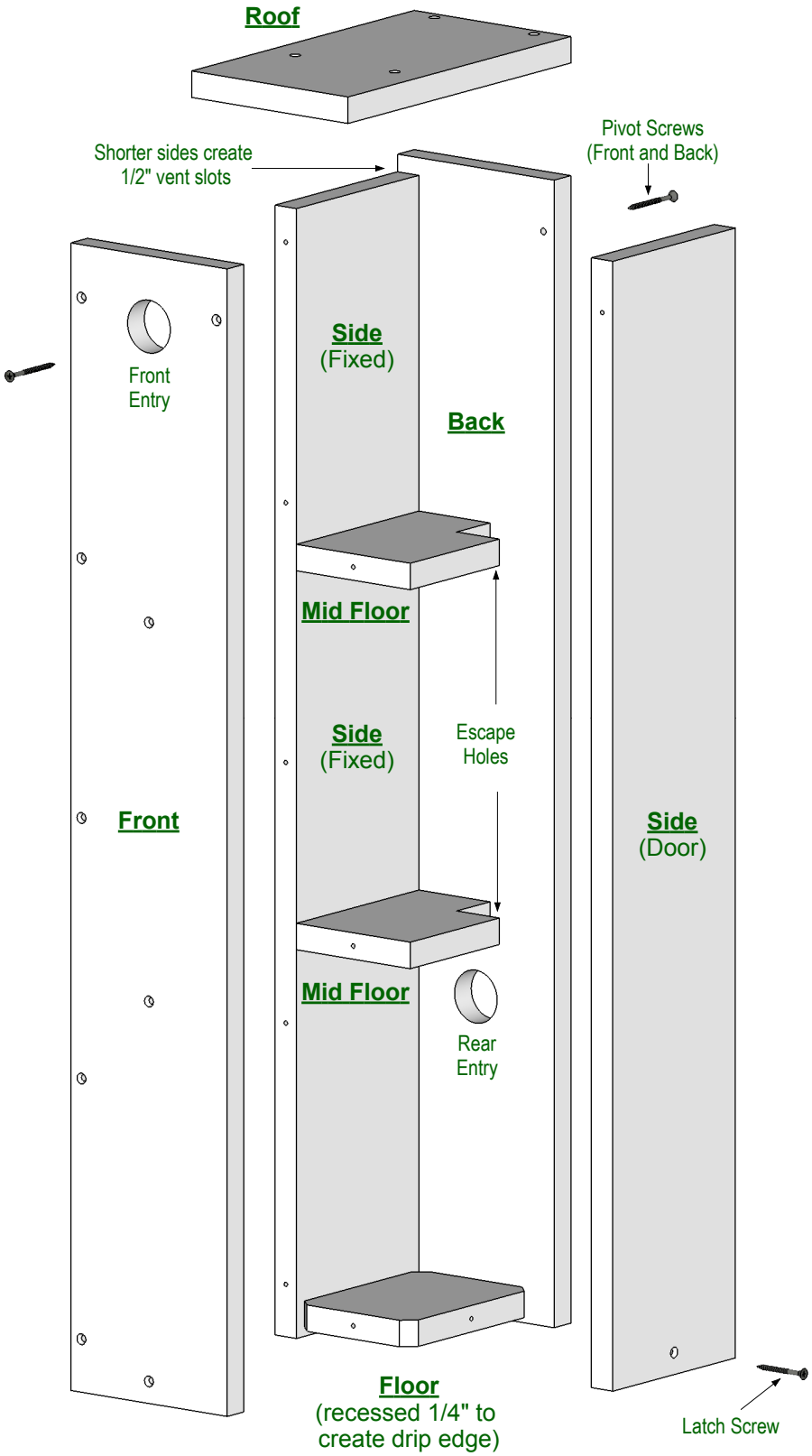

Flying Squirrel Nestbox

Drawn by: Fred Stille, Sr.	February 15, 2015	Page 4 of 4

plan by NestBoxBuilder.com Copyright © 2010 All rights reserved